SWRduino™ KT-001

SWR RF bridge compatible with Arduino™ Uno shield
Up to 20 W continuous RF power
1.8-30 MHz frequency range

Main Features

- Higly integrated QRP HF band SWR bridge up to 20 W
- Full compatibility with Arduino™ Uno board
- Tandem Match configuration for best directivity
- Only THT components for easy assembly
- Easy access to measured values (P_{fwd} and P_{ref}) from ANALOG_IN input section
- Germanium diodes for best sensitivity
- Optional trimmers for fine adjustments
- SMA connectors for size critical applications (BNC also can be mounted)
- Equipped with ISP connector (2x3 pin header)
- Only passive components; no current consumption
- CE marked
- RoHS compliant
- 1-year warranty

Mechanical Characteristics

- Full mechanical and electrical compatibility with Arduino™ Uno Board
- Double-layer PCB
- Double-sided connectors/plugs
- Compact design: 68 x 54 x 12 mm

Application

- Experimental SWR measurement system for amateur radio
- Part of Arduino's controlled antenna tuner
- Part of RF beacons (CW, BPSK, WSPR)
- ALC detector module for experimental TX modules
- Experimental remote measurement circuitry

General Description

The KT-001 SWRduino™ is a fully integrated standing-wave-ratio (SWR) measuring circuit fully compatible with Arduino™ Uno platform. SWRduino™ is built as the tandem match configuration, which provides excellent directivity in comparison to other popular topologies.

The JP1 connector allows programming the Arduino™ Uno device through 2x3 pin header.

The SWRduino™ has only passive components so no additional energy is drained from the power source.

Absolute Maximum Ratings

Maximum Input Voltage:	31,6 Vrms (+43 dBm)
Power Dissipation @ +25°C:	<0.5 W
Operating Temperature Range:	-45°C to +85°C
Lead Temperature (Soldering 10 sec):	+300°C

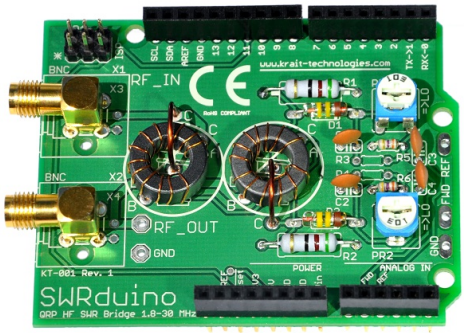

FIGURE 1. Assembled SWRduino™ KT-001 board

Assembly Instructions

It is strongly recommended to start the assembly with the smallest parts and then install the ferrite cores with windings. All types of connectors should be installed last.

Ferrite core winding procedure

1) Recommended primary winding length is 4,5 cm. Please note that the „pass thru" winding has to be connected between points C and D.

2) Recommended secondary winding length is 25 cm. The secondary winding (recommended 12 turns) has to be soldered between points A and B.

Please note that:

▪ It is important to make sure that the winding direction is the same for the primary and the secondary (both start at points A and C).

▪ Each pair of points are doubbled for more flexibility during assembly process (if needed).

▪ If the next module (a shield board) will be stacked over SWRduino™ shield it is required to assembly the ferrite cores in horizontal position to meet the limit of height to the next board.

▪ If the overall height is not critical, the ferrite cores can mounted vertically, which improves the directivity of the SWR bridge.

► It is good practise to spread the windings over the entire toroidal ferrite core for the best coupling.

Installing connectors

The SWRduino™ PCB has been designed in such a way that it is possible to mount two types of connectors (one of them):

▪ BNC type (X1, X2)

▪ SMA type (X3, X4)

Insulation consideration

► Pay attention for a required distance to the next stacked shield board. Please put there an additional insulation to avoid a short circuit.

Components List

Table 1. Components list

No.	DESIGNATOR	DESCRIPTION	QTY	PART NUMBER	VALUE
1	R1, R2	51R/1W resistor	2		
2	R3, R4	Not assembled	–	–	–
3	R5, R6	47k/0.25W resistor	2		
4	PR1, PR2	10k/0.1W trimmer	2		
5	D1, D2	Germanium diode	2	1N5711 or equivalent	
6	C1, C2, C3, C4	10nF/50V, 10%, THT, 2.54 mm pitch	4	CC-10N	10 nF
7	X1, X2 (optional) X3, X4 (optional)	BNC THT angle connector[1] SMA THT angle connector[1]	2 2		
8	JP1	2x3 pin header, 2,54 mm pitch	1		
9	TR1, TR2	Toroidal ferrite core	2	FT50-43	
10	SH1	1x10 pin header 1x8 pin header 1x6 pin header	1 2 1		
11	PCB	Printed board circuit	1	KT-001P	
12	Enamel wire	AWG #28	0.7 m		
13	Enamel wire	AWG #20	0.1 m		

1) Included RF connectors depend on a kit version. Please refer to Table 3.

Pin Configurations

Table 2. Pin configurations

PIN CONNECTIONS	
ARDUINO standard	**Function on SWRduino**
–	–
–	–
–	–
–	–
N.C.	N.C.
IOREF	N.C.
/RESET	**Reset (ISP)**
+3V3	N.C.
+5V	**+5V (ISP)**
GND	**GND (ISP)**
GND	**GND (ISP)**
+Vin	N.C.
A0	N.C.
A1	**V_FWD**
A2	**V_REF**
A3	N.C.
A4	N.C.
A5	N.C.

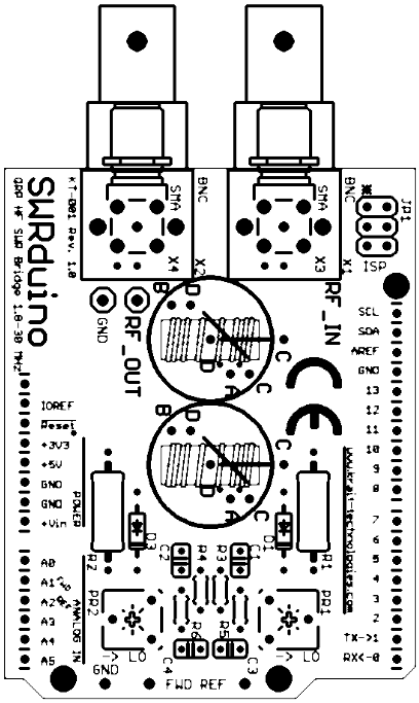

PIN CONNECTIONS	
ARDUINO standard	**Function on SWRduino**
SCL	N.C.
SDA	N.C.
AREF	N.C.
GND	**GND (ISP)**
13	**SCK (ISP)**
12	**MISO (ISP)**
11	**MOSI (ISP)**
10	N.C.
9	N.C.
8	N.C.
7	N.C.
6	N.C.
5	N.C.
4	N.C.
3	N.C.
2	N.C.
1 (TX)	N.C.
0 (RX)	N.C.

FIGURE 2. Descriptive layer of SWRduino™ KT-001 board

Schematic Diagram

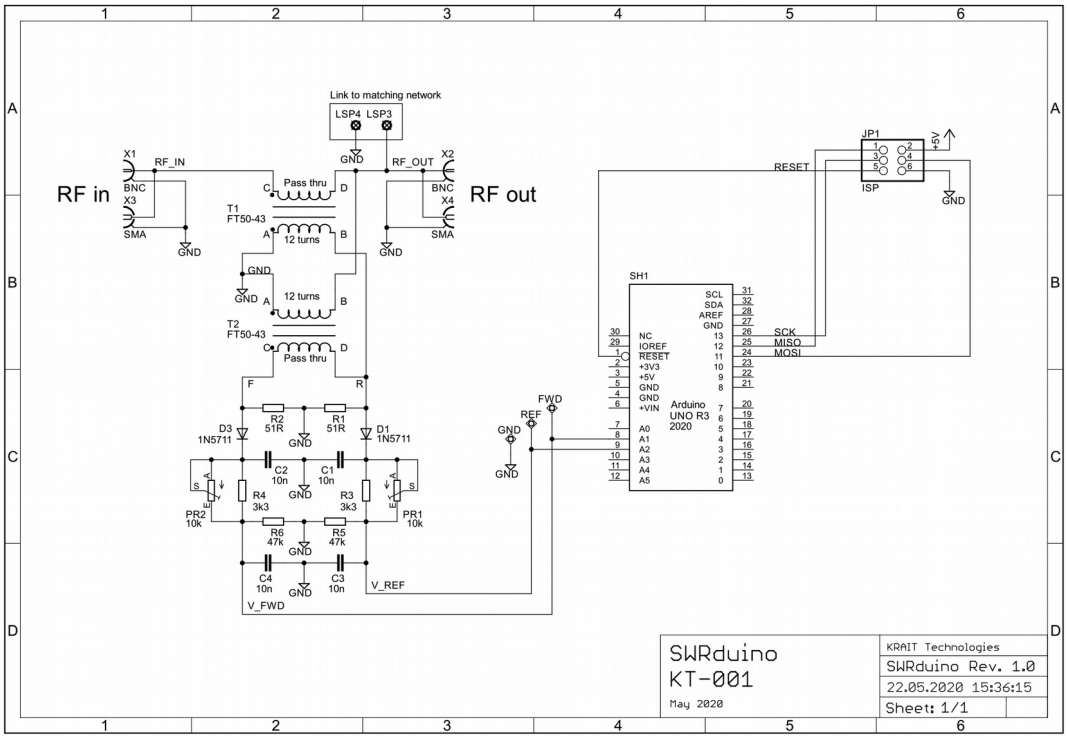

FIGURE 3. Schematic diagram

Mechanical Details

SWRduino™ shield is fully compatible with the Arduino™ Uno footprint.
If the ferrite cores are assembled horizontally (flat), it is possible to install a next shield above, according to Arduino™ Uno standard.

Board dimensions: 68 x 54 x 12 mm
PCB specification: FR 4, 35 um layers, HAL

Ordering Information

Table 3. Ordering information

Description	Version	Ordering Code	QTY
Printed Circuit Board only	PCB	KT-001P	1
Kit for self assembly with BNC connectors (PCB and components included)	Kit	KT-001KB	1
Kit for self assembly with SMA connectors (PCB and components included)	Kit	KT-001KS	1
Assembled module with BNC connectors	Assembled	KT-001B	1
Assembled module with SMA connectors	Assembled	KT-001S	1

KRAIT Technologies
29/166 Stefana Batorego Street
02-591 Warsaw
Poland
EUROPE

Tel: +48 696 988 769

www.krait-technologies.com

Made in POLAND