NCDXF/IARU Beacon Monitor KT-003

A useful tool for monitoring HF propagation conditions around the world
Compact design 140x90 mm, stationary/battery operation of the device
Synchronized with a time reference from GPS module (worldwide coverage)

Features

- Usefull tool for quick HF propagation condition check
- Time synchronized with the built-in GPS receiver
- SYNC LED to monitor synchronization status
- CTRL key to change the band
- External DC_IN connector (2.1/5.5 type)
- Reverse polarity protection
- Input voltage range: 8.5-16.0 VDC
- Optional battery operation: 3x AAA (dedicated holes for the battery holder)
- Current consumption: 70 mA @ 9.0 V
- All components are THT only for easy assembly

Mechanical Characteristics

- Metalised front panel with set of LEDs and CTRL switch
- Dimensions: 140 x 90 x 25 mm
- Two-layer PCB (with soldermask and description layer)
- Wooden case available (sold separately)

Application

- Useful tool for easy HF propagation monitoring
- Part of the radio shack

The International Beacon Project

The International Beacon Project (IBP) is a worldwide network of radio propagation beacons. It consists of 18 continuous wave (CW) beacons operating on five designated frequencies in the high frequency band. The IBP beacons provide a means of assessing the prevailing ionospheric signal propagation characteristics to both amateur and commercial high frequency radio users. The project is coordinated by the Northern California DX Foundation (NCDXF) and the International Amateur Radio Union (IARU).

How data is transmitted?

- The beacons transmit on 5 frequencies: 14.100, 18.110, 21.150, 24.930, 28.200 MHz in a 3 minute cycle so that no two beacons transmit at the same time on the same frequency.
- Each beacon transmits once on each band once every three minutes, 24 hours a day.
- A transmission consists of the callsign of the beacon sent at 22 words per minute followed by four one-second dashes.
- The callsign and the first dash are sent at 100 watts. The remaining dashes are sent at 10 watts, 1 watt and 100 milliwatts.
- At the end of each 10 second transmission, the beacon steps to the next higher band and the next beacon in the sequence begins transmitting.

Absolute Maximum Ratings

Maximum Input Voltage:	18.0 VDC
Current consuption @ 9 Vin DC	70.0 mA
Operating Temperature Range:	+5°C to +45°C
Lead Temperature (Soldering 10 sec):	+300°C

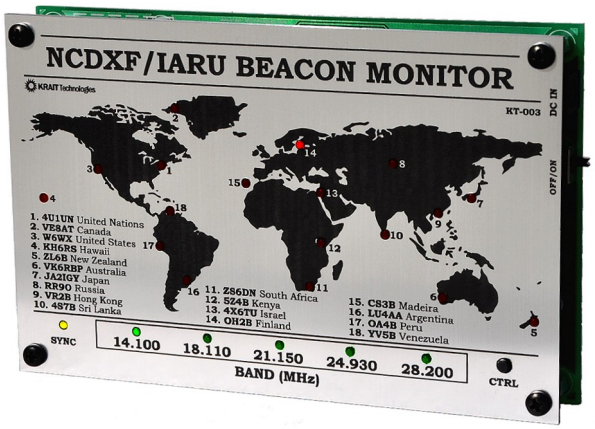

FIGURE 1. Assembled NCDXF/IARU Beacon Monitor KT-003 kit

Operation Principle

After the power is turned on the Monitor goes to its Initial State while searching for the GPS timestamp. In this state, all red LEDs are off.

If the complete GPS data frame is received correctly, the system will automatically synchronize with the received time, indicating the currently active beacon on the world map with one of the 18 red LEDs on a given frequency band.

If for some reason the GPS module does not receive fresh data, the system switches to an internal timing state (#3 or #4). For the first 6 hours, the system will remain in state #3. If the last tag was received longer than 6 hours, the system indicates this by switching to state #4.*

Table 1. Possible operating states of the NCDXF/IARU Beacon Monitor

No	State name	LED Sync flashing sequence
1	Initial State	X_____X_____X(...)
2	In constant synchronization with GPS	XXXXXXXXXXXXXXXXXXXXX(...)
3	Synchronized but actually lost GPS signal	XXXXXXXXX_XXXXXXXXX_X(...)
4	Synchronized but lost GPS signal longer than 6 hours	XXXXX_____XXXXX_____X(...)

X – LED on, _ – LED off

**) Please note that KT-003 is not equippped with a specialized RTC (Real Time Clock). This can result in a time deviation greated than a second after a few hours. This will be indicated as state #4.*

Schematic Diagram

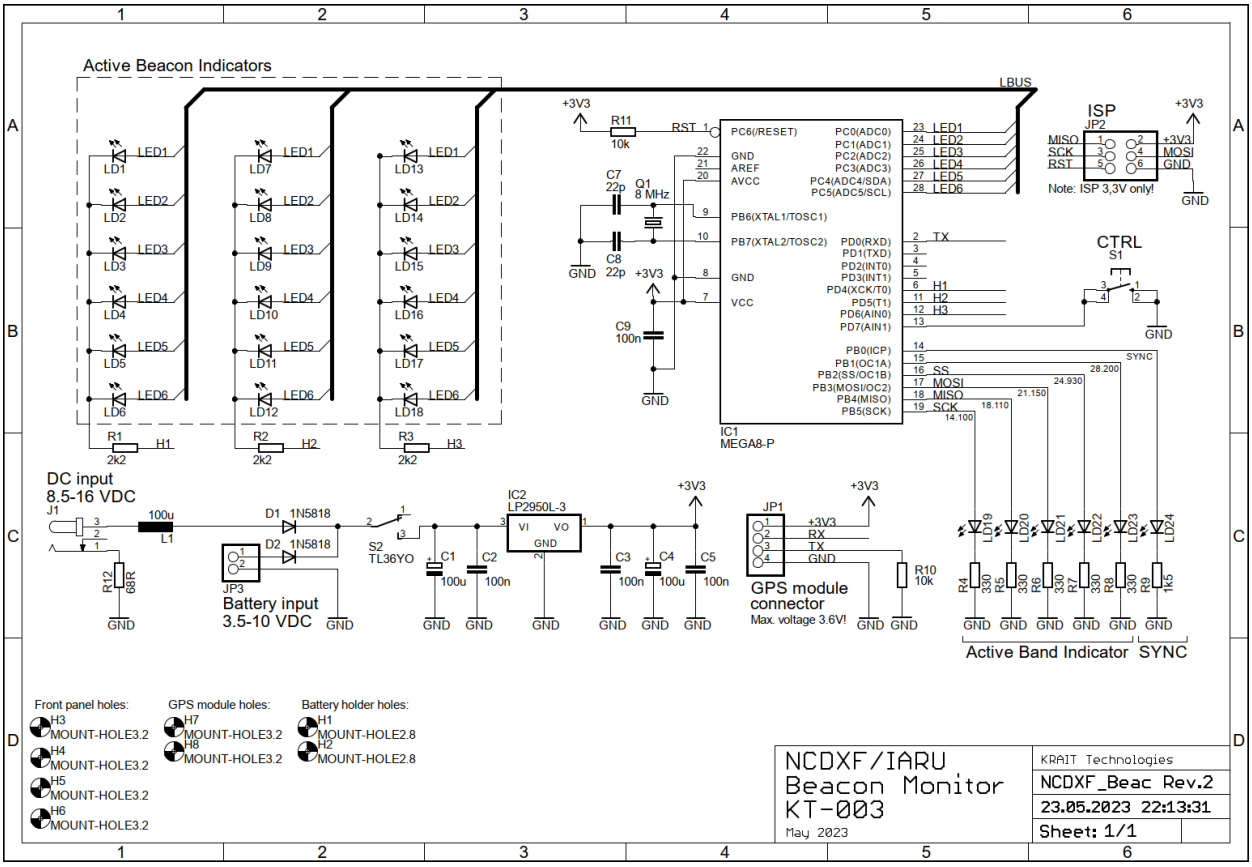

FIGURE 2. NCDXF/IARU Beacon Monitor (KT-003) schematic diagram

Circuit Description

The main part of the circuit is the AVR microcontroller (ATmega8) which gather data from the GPS module (TX line), process data and control all LEDs.

All components are supplied from 3.0 V thanks to LDO voltage regulator (LP2950). In the standard operation the input voltage has to be connected to J1 connector. Accepted input voltage range is 8.5 – 16 V.

Use JP3 connector to solder cables from battery holder (3x AAA). Pay attention to the polarization! Both inputs are protected against reverse polarity.

The JP1 connector allows to program the ATmega8 with a new firmware if available. It uses 2x3 pin ISP header and 3.3 V logic only (5.0 V will damage GPS module!). Newer versions of the firmware will be made available free of charge or sold as a programmed chip. The KT-003 source code is not public.

Mechanical Details

Board dimensions: 140 x 90 x 25 mm (measured with assembled PCBs, front panel, battery pack)
PCB specification: FR 4, 35 um layers, HAL, two-layer, 1.6 mm

On the right side are localised:
- DC input connector (on the right top)
- On/Off Power switch (below)

Using the Beacon Monitor

For proper operation, the GPS module requires the reception of signals from satellites. Modern GPS modules, thanks to high sensitivity, allow you to work even from closed rooms, if they are placed close to the window. However, the level of background EMI noise also matters here. Note that a regular PC and monitor can generate enough interference to drown out GPS reception within 1 meter.

If you expect that the KT-003 Beacon Monitor will not be placed right next to the window, two solutions are available:

a) turn on the KT-003 module and place it next to the window; when it synchronizes, you can move it back to any place; thanks to built-in RTC it can work for many hours with very good synchronization without being in direct range of GPS satellites,

b) if stationary operation of the KT-003 module outside the window range is required, then the GPS module should be mounted separately using a 4-wire cable (not included in the kit).

Assembly Instructions

Required tools for assembly and startup
❑ soldering iron, ❑ tin and flux, ❑ tweezers, ❑ side cutters,
❑ digital multimerer, ❑ screwdriver PH1

Recommended assembly order
❑ solder diodes: D1 and D2 (1N5148) Watch the polarity!
❑ solder choke: L1 (100 uH)
❑ solder resistors: R1, R2, R3 (all 2k2)
❑ solder resistors: R4, R5, R6, R7, R8 (all 330R)
❑ solder resistor: R9 (1k5)
❑ solder resistors: R10, R11 (10k)
❑ solder resistor: R12 (68R)
❑ solder electrolytic capacitors: C1, C4 (100 uF/25 V)
► Pay attention to the polarity of these capacitors! Longer pin is positive.
❑ solder ceramic capacitors: C7 and C8 (both 22 pF)
❑ solder ceramic capacitors: C2, C3, C5, C9 (all 100 nF)
❑ solder crystal oscillator Q1 (8 MHz)
❑ solder voltage regulator IC2 (LP2950L-3)
❑ solder DC input connector: J1 (2.1/5.5 type)
❑ solder CTRL switch: S1 (microswitch)
❑ solder on/off switch: S2 (two-position sliding switch)
❑ solder 28-pin socket into IC1 pad

► At that point all LEDs have to be carefully and precisely soldered. If the diodes are not perfectly straight, it will not be possible to mount the front panel later!
►► Before you solder any LED diode please check twice where is anode and catode leg. The cathode (shorter leg) has to be soldered into a rectangle pad on the PCB.
►►► Before you solder any LED diode remember to put each diode's leg pair into a plastic spacer to easily get the same height.

❑ solder yellow diode: LD24 + plastic spacer
❑ solder green diodes: LD19, LD20, LD21, LD22, LD23 (5 pcs) + plastic spacers
► Pay attention to the polarization and mechanical position!

The next step is related to the GPS receiver:
❑ solder GPS antena first to GPS board as shown in Fig. 5
❑ carrefully connect GPS antenna connector to the board
❑ solder 4-pin header into GPS module on the TOP side as shown in Fig. 6
❑ put the plastic screw (screw head should be on the TOP side of main PCB) and screw the two plastic nuts on the back on each screw
❑ put the GPS module into main board and out two nuts
❑ solder all four pins to the main board (Fig.6)
❑ solder red diodes: LD1...LD18 (18 pcs) + plastic spacers
► Pay attention to the polarization and mechanical position! All diodes must be soldered perfectely vertically.
❑ put microcontroller into socket: IC1 (ATmega8)
► Notice where is the pin 1 on the IC1 footprint!

Note that ISP connector: JP2 (3x2) should be not assembled.

Final assembly step
❑ put four M4x10 screws via four holes on the corners of the PCB and then screw it using four metal pins (3x15 mm)
❑ carefully place the front panel and ensure that all installed LEDs fits into the designated holes
► It is possible that some diodes will require slight soldering adjustments to correct their position!
❑ screw the front panel to the back module using four black screws (M3x10)

If operation with 3 x AAA baterry is required install a battery holder (not attached to the kit) on the back side and solder cables to port JP3. Pay attention to the polarity!

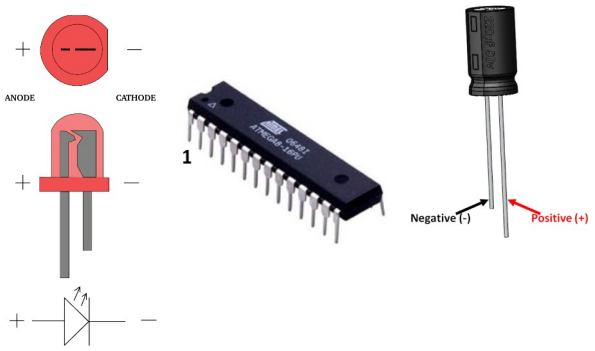

FIGURE 3. Pin designators

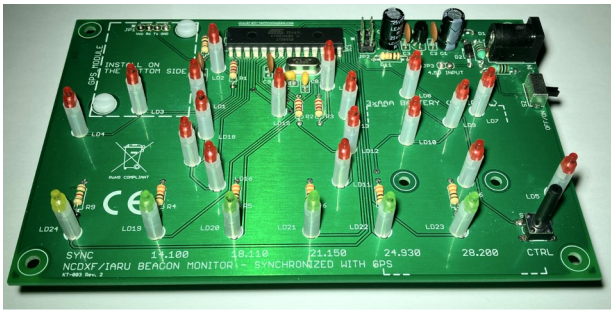

FIGURE 4. Assembled board KT-003

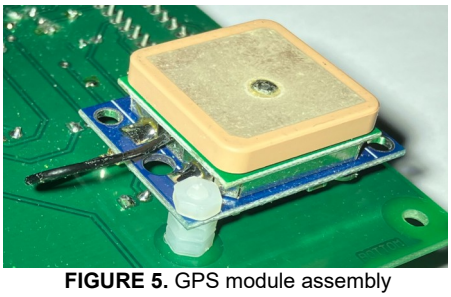

FIGURE 5. GPS module assembly

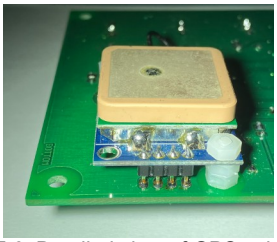

FIGURE 6. Detailed view of GPS soldered pin

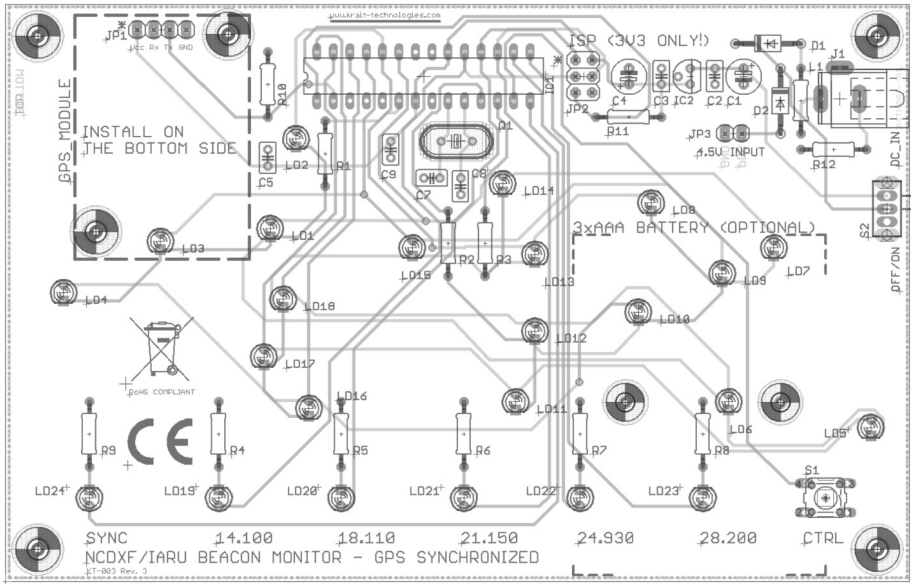

FIGURE 7. KT-003 PCB desctiption layer

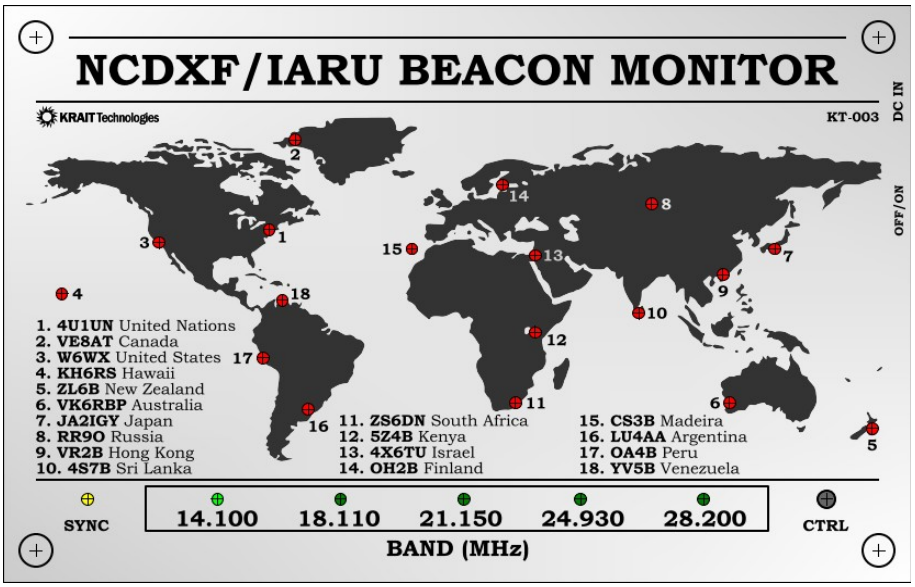

FIGURE 8. KT-003 front panel description

Startup Procedure

1. If possible use the laboratory power supply with current limitation. Start with 0 V and current limiter set to 80 mA. Then slowly increase the output voltage and monitor current draw. Expected current draw is 60-80 mA at 9 VDC.

2. Each time the power is turned on, the red LEDs start-up sequence begins. This allows to easily check if all red diodes are properly soldered. After that the default band (14.100) is activated what is indicated by green LED. Click CTRL button to switch to the next band.

3. SYNC diode will blink immediatelly indicating no data received yet (mode #1, as desribed in Table 1).

Components List

Table 2. Components list

No.	DESIGNATOR	DESCRIPTION	QTY	PART NUMBER	VALUE
1	R1, R2, R3	2k2/0.25W THT resistor	3		
2	R4, R5, R6, R7, R8	330R/0.25W THT resistor	5		
3	R9	1k5/0.25W THT resistor	1		
4	R10, R11	10k/0.25W THT resistor	2		
5	R12	68R/0,6W THT resistor	1		
6	C1, C4	100u/25V THT electrolitic	2		
7	C2, C3, C5, C9	100n/35V THT ceramic	4		
8	C7, C8	22pF/16V THT ceramic	2		
9	D1, D2	Schottky diode THT	2	1N5818	
10	L1	Choke THT	1		100uH
11	Q1	8 MHz quartz crystal oscillator THT low-profile	1		
12	LD1...LD18	LED 2 mm red THT	18		
13	LD19...LD23	LED 2 mm green THT	5		
14	LD24	LED 2 mm yellow THT	1		
15		Spacer sleeve for LED	24		
16	IC1	ATmega8 DIP-28 THT (already programmed)	1	ATmega8A	
17	IC2	Voltage regulator TO-92 THT	1	LP2950L-3.0	
18	JP1	GPS module	1	GY-GPS6MV2	
19	JP2	ISP connector 2x3 (2,54 mm)	N/A		
20	JP3	--- not installed ---	1		
21	J1	2,1x5,5 connector, angle version, THT	1		
22	S1	Switch momentary (Tact-switch)	1		
23	S2	Switch 2-position (sliding switch)	1		
24	JP1	Goldpin 4x1 (for GPS module)	1		
25		Metal pins M3x15 female-female	4		
26		Black M3x15 screws	4		
27		M3x10 screws	4		
28		M3x10 poliamid screws (for GPS module assembly)	2		
29		Poliamid nuts M3	6		
30		Metalised plastic front panel for KT-003	1		
31		Main PCB board 140x90 mm	1		
32		28-pin DIP socket	1		

Ordering Information

Table 3. Ordering information

Description	Version	Ordering Code	QTY
Printed Circuit Board only	PCB	KT-003P	1
Kit for self assembly	Kit	KT-003K	1
Assembled module	Assembled	KT-003A	1
Wooden lacquered housing for KT-003		KT-003C	1

29/166 Stefana Batorego Street
02-591 Warsaw
Poland
EUROPE

Tel: +48 696 988 769

www.krait-technologies.com

Made in POLAND

Appendix A

Table 4. Detailed location of NCDXF/IARU beacons

Slot	DX Entity	Callsign	Location	Latitude	Longitude
1	United Nations	4U1UN	New York City	40º 45' N	73º 58' W
2	Canada	VE8AT	Eureka, Nunavut	79º 59' N	85º 57' W
3	United States	W6WX	Mt. Umunhum	37º 09' N	121º 54' W
4	Hawaii	KH6RS	Laie	21º 38' N	157º 55' W
5	New Zealand	ZL6B	Masterton	41º 03' S	175º 36' E
6	Australia	VK6RBP	Rolystone	32º 06' S	116º 03' E
7	Japan	JA2IGY	Mt. Asama	34º 27' N	136º 47' E
8	Russia	RR9O	Novosibirsk	54º 59' N	82º 54' E
9	Hong Kong	VR2B	Hong Kong	22º 16' N	114º 09' E
10	Sri Lanka	4S7B	Colombo	6º 54' N	79º 52' E
11	South Africa	ZS6DN	Pretoria	25º 54' S	28º 16' E
12	Kenya	5Z4B	Kiambu	1º 1' S	37º 3' E
13	Israel	4X6TU	Tel Aviv	32º 03' N	34º 46' E
14	Finland	OH2B	Karkkila	60º 32' N	24º 06' E
15	Madeira	CS3B	Santo da Serra	32º 43' N	16º 48' W
16	Argentina	LU4AA	Buenos Aires	34º 37' S	58º 21' W
17	Peru	OA4B	Lima	12º 04' S	76º 57' W
18	Venezuela	YV5B	Caracas	10º 25' N	66º 51' W

Appendix B

Table 5. Detailed NCDXF/IAUR beacon broadcasting time slots

Callsign	Location	14.100	18.110	21.150	24.930	28.200	Operator
4U1UN	United Nations	00:00	00:10	00:20	00:30	00:40	UNRC
VE8AT	Canada	00:10	00:20	00:30	00:40	00:50	RAC/NARC
W6WX	United States	00:20	00:30	00:40	00:50	01:00	NCDXF
KH6RS	Hawaii	00:30	00:40	00:50	01:00	01:10	NOARG/HARC
ZL6B	New Zealand	00:40	00:50	01:00	01:10	01:20	NZART
VK6RBP	Australia	00:50	01:00	01:10	01:20	01:30	WIA
JA2IGY	Japan	01:00	01:10	01:20	01:30	01:40	JARL
RR9O	Russia	01:10	01:20	01:30	01:40	01:50	SRR
VR2B	Hong Kong	01:20	01:30	01:40	01:50	02:00	CRSA/HARTS
4S7B	Sri Lanka	01:30	01:40	01:50	02:00	02:10	RSSL
ZS6DN	South Africa	01:40	01:50	02:00	02:10	02:20	ZS6DN
5Z4B	Kenya	01:50	02:00	02:10	02:20	02:30	ARSK
4X6TU	Israel	02:00	02:10	02:20	02:30	02:40	IARC
OH2B	Finland	02:10	02:20	02:30	02:40	02:50	SRAL
CS3B	Madeira	02:20	02:30	02:40	02:50	00:00	ARRM
LU4AA	Argentina	02:30	02:40	02:50	00:00	00:10	RCA
OA4B	Peru	02:40	02:50	00:00	00:10	00:20	RCP
YV5B	Venezuela	02:50	00:00	00:10	00:20	00:30	RCV